VNVe – transport delay

Václav Šátek
Lecturer: Petr Veigend

Brno University of Technology,
Faculty of Information technology,
Božetěchova 2,
61266 Brno
satek AT fit.vut.cz

Version: March 30, 2020

Overview

Introduction

In this course, we want our systems to be **homogeneous** (composed of integrators, adders, gains and other basic computational elements).
We will model the **transport delay** in similar fashion (which means to not use any prepared blocks, but only mentioned basic elements.

Model of the transport delay

The approximation of the transport delay can be performed by replacing the exponential function by the specific polynomial. It is not surprising, that the coefficients of the polynomial are very important for the stability of the approximated system (Hurwitz determinant).

Model of the transport delay

$y' \to k y$

Polynomial that will be used to replace the exponential function has the following form:

$$e^{-pT} \approx \boxed{\frac{E(-p)}{E(p)}} = \boxed{\frac{y}{z}} = \frac{\sum_{k=0}^{n} \frac{(2n-k)!}{k!(n-k)!}(-pT)^k}{\sum_{k=0}^{n} \frac{(2n-k)!}{k!(n-k)!}(pT)^k}$$

where T is the required delay, p is the Laplace transform operator, y is the output, z is the forcing function and n is the required order of the approximation. Used approximation is so called **Padé approximation** of a function.

Example

$$\frac{E(-p)}{E(p)} = \frac{y}{z} = \frac{\sum_{k=0}^{n} \frac{(2n-k)!}{k!(n-k)!}(-pT)^k}{\sum_{k=0}^{n} \frac{(2n-k)!}{k!(n-k)!}(pT)^k}$$

The calculation will be demonstrated using the 3rd order polynomial ($n = 3$). First, we can calculate the coefficients of the polynomials $E(-p)$ a $E(p)$:

$$k = 0 \qquad \frac{(2 \cdot 3 - 0)!}{0!(3-0)!} = \frac{6!}{3!} = 120$$

$$\frac{(2 \cdot 3 - 0)!}{0!\,(3-0)!} = \frac{6!}{3!}$$

$$k = 1 \qquad \frac{(2 \cdot 3 - 1)!}{1!(3-1)!} = \frac{5!}{2!} = 60$$

$$k = 2 \qquad \frac{(2 \cdot 3 - 2)!}{2!(3-2)!} = \frac{4!}{2!} = 12$$

$$k = 3 \qquad \frac{(2 \cdot 3 - 3)!}{3!(3-3)!} = \frac{3!}{3!} = 1$$

$$\frac{(2 \cdot 3 - 3)!}{3!\,(3-3)!} = \frac{3!}{3!} = 1$$

Example

$$\frac{E(-p)}{E(p)} = \frac{y}{z} = \frac{\sum_{k=0}^{n} \frac{(2n-k)!}{k!(n-k)!}(-pT)^k}{\sum_{k=0}^{n} \frac{(2n-k)!}{k!(n-k)!}(pT)^k}$$

For the obtained values of the coefficients (120,60, 24, 1), the polynomials $E(p)$ and $E(-p)$ are going to have the following form:

$$\begin{aligned} E(p) &= 120 + 60\,Tp + 24(Tp)^2 + 1(Tp)^3 \\ &= 120 + 60\,Tp + 12\,T^2p^2 + T^3p^3 \\ E(-p) &= 120 - 60\,Tp + 24(Tp)^2 - 1(Tp)^3 \\ &= 120 - 60\,Tp + 12\,T^2p^2 - T^3p^3 \end{aligned}$$

The problem can be rewritten as

$$\frac{y}{z} = \frac{E(-p)}{E(p)} = \frac{120 - 60\,Tp + 12\,T^2p^2 - T^3p^3}{120 + 60\,Tp + 12\,T^2p^2 + T^3p^3}$$

Příklad

$$\frac{y}{z} = \frac{120 - 60\,Tp + 12\,T^2p^2 - T^3p^3}{120 + 60\,Tp + 12\,T^2p^2 + T^3p^3}$$

Simplifying, we get:

$$y = z\frac{120 - 60\,Tp + 12\,T^2p^2 - T^3p^3}{120 + 60\,Tp + 12\,T^2p^2 + T^3p^3}$$

Notice, that we have the derivatives of the forcing function z, so we can use either:

- **method of integration order reduction with additional variable**
- method of successive integration

Example

$$y = z\frac{120 - 60\,Tp + 12\,T^2p^2 - T^3p^3}{120 + 60\,Tp + 12\,T^2p^2 + T^3p^3}$$

Additional variable v:

$$v = \frac{z}{120 + 60\,Tp + 12\,T^2p^2 + T^3p^3}$$

$$120v + 60\,Tpv + 12\,T^2p^2v + T^3p^3v = z$$

$$T^3p^3v = z - 12\,T^2p^2v - 60\,Tpv - 120v$$

$$p^3v = \frac{z}{T^3} - \frac{12\,T^2p^2v}{T^3} - \frac{60\,Tpv}{T^3} - \frac{120v}{T^3}$$

$$= \frac{z}{T^3} - \frac{12p^2v}{T} - \frac{60pv}{T^2} - \frac{120v}{T^3}$$

Example

$$p^3 v = \frac{z}{T^3} - \frac{12p^2 v}{T} - \frac{60pv}{T^2} - \frac{120v}{T^3}$$

The forcing function z has no longer any derivatives. The simple method of integration order reduction can be used:

$$p^2 v = \frac{1}{p} p^3 v = \frac{1}{p}\left(\frac{z}{T^3} - \frac{12p^2 v}{T} - \frac{60pv}{T^2} - \frac{120v}{T^3}\right)$$

$$pv = \frac{1}{p} p^2 v$$

$$v = \frac{1}{p} pv$$

All initial conditions $(p^2 v(0), pv(0), v(0))$ are equal to zero.

Example

Equation for the output y:

$$y = 120v - 60Tpv + 12T^2p^2v - T^3p^3v$$

FOS

Example – block scheme

The example block scheme for the problem:

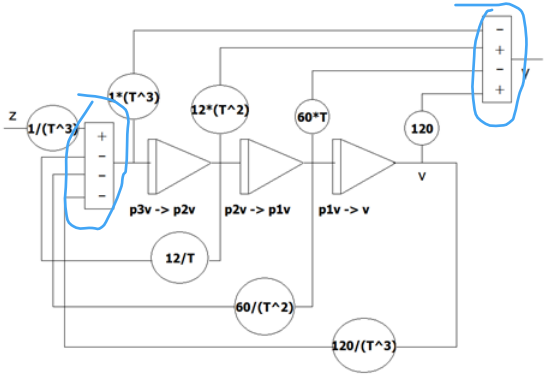

Figure: The example block scheme

Possible problem (with high order of the approximation): adders

Example – block scheme

For the higher derivatives, the different representation might be better. **Implicator** can be used:

$\sum B_3 a + A_{3y} y_1 = D$

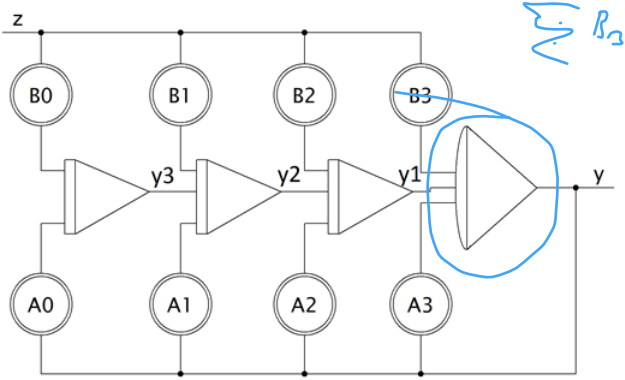

Figure: Block scheme with the implicator

Example – block scheme

Coefficients:

$$A_0 = -1 \qquad B_0 = 1$$
$$A_1 = 12 \qquad B_1 = 12$$
$$A_2 = -60 \qquad B_2 = 60$$
$$A_3 = 120 \qquad B_3 = 120$$

Equations, that the system solves:

$$\begin{aligned} B_3 z + A_3 y + y_1 &= 0 \\ B_2 z + A_2 y + y_2 &= -y1' \\ B_1 z + A_1 y + y_3 &= -y2' \\ B_0 z + A_0 y &= -y3' \end{aligned}$$

Thank you for your attention!